The Perkins 400 Series provides compact power from a robust family of 2, 3 and 4 cylinder diesel engines, designed to meet today's uncompromising demands within the power generation industry.

The 403C-15G is a compact 3-cylinder naturally aspirated diesel engine. It's premium features provide economic and durable operation for standby duty, low gaseous emissions, overall performance and reliability.

400 Series

403C-15G

Diesel Engine – ElectropaK

13.3 kWm 1500 rev/min
15.9 kWm 1800 rev/min
22.9 kWm 3000 rev/min

Compact, efficient power

A class-leading engine package coupled with an innovative, newly designed cooling pack provides optimum power density, making installation and transportation easier and cheaper. This package has been specially designed to hit the key power nodes required by the power generation industry.

Quiet, clean power

The 403C-15G has an exceptionally low noise signature making it the ideal choice for power generation in any environment. A high compression ratio also ensures clean rapid starting in all conditions. Design features ensure maximum cleanliness in terms of emissions throughout the engines operating life.

Reliable power

Developed and tested using the latest engineering techniques this engine reliably provides power when you need it.
Operating and maintenance costs are reduced through excellent fuel and oil economy whilst whole-life costs are enhanced by a 500 hour service interval and a 2 year warranty.
Excellent service access further improves maintenance and support is provided by a worldwide network of 4000 distributors and dealers.

Engine Speed (rev/min)	Type of Operation	Typical Generator Output (Net)		Engine Power			
				Gross		Net	
		kVA	kWe	kWm	bhp	kWm	bhp
1500	Prime Power	13.3	10.6	12.2	16.4	12.0	16.1
	Standby (maximum)	14.5	11.6	13.5	18.1	13.3	17.8
1800	Prime Power	16.1	12.9	14.7	19.7	14.4	19.3
	Standby (maximum)	17.5	14.0	16.2	21.7	15.9	21.2
3000	Prime Power	22.4	17.9	21.7	29.1	20.7	27.8
	Standby (maximum)	24.1	19.2	23.9	32.1	22.9	31.0

The above ratings represent the engine performance capabilities to conditions specified in ISO 8528/1, ISO 3046/1:1986, BS 5514/1.

Derating may be required for conditions outside these; consult Perkins Engines Company Limited.
Generator powers are typical and are based on typical alternator efficiencies and a power factor (cos θ) of 0.8.

Fuel specification: BS 2869: Part 2 1998 Class A2 or ASTM D975 D2.
Lubricating oil: To API CH4/ACEA E5.

Rating Definitions
Prime Power: Power available at variable load in lieu of a main power network. Overload of 10% is permitted for 1 hour in every 12 hours operation.
Standby (maximum): Power available at variable load in the event of a main power network failure. No overload is permitted.

All information in this document is substantially correct at time of printing and may be altered subsequently

Publication No. 1663/10/05 Produced in England ©2005 Perkins Engines Company Limited

400 Series

403C-15G

Standard ElectropaK Specification

Air inlet
- Mounted air filter

Fuel system
- Mechanically governed cassette type fuel injection pump
- Split element fuel filter

Lubrication system
- Wet steel sump with filler and dipstick
- Spin-on full-flow lub oil filter

Cooling system
- Thermostatically-controlled system with belt driven circulating pump and pusher fan
- Mounted radiator piping and guards

Electrical equipment
- 12 volt starter motor and 12 volt 55 amp alternator with DC output
- Oil pressure and coolant temperature switches
- 12 volt shut off solenoid energised to run
- Glow plug cold start aid and heater/starter switch

Flywheel and housing
1500/1800 rev/min
- High inertia flywheel to SAE J620 Size 7½ Heavy
- Flywheel housing SAE 4 Long

3000/3600 rev/min
- High inertia flywheel to SAE J620 Size 7½ Light
- Flywheel housing SAE 4 Short

Mountings
- Front and rear engine mounting bracket

Literature
- User's Handbook

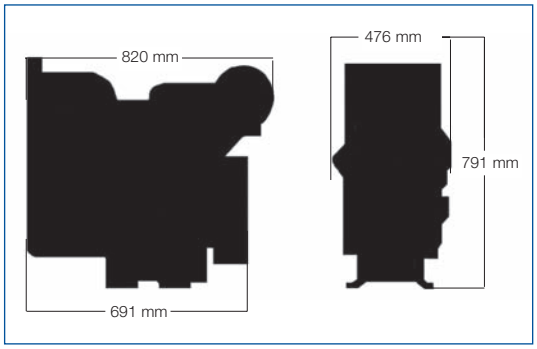

General Data

Number of cylinders	3
Cylinder arrangement	Vertical in-line
Cycle	4 stroke
Induction system	Natural aspiration
Combustion system	Indirect injection
Cooling system	Water-cooled
Bore and stroke	84 x 90 mm
Displacement	1496cc
Compression ratio	22.5:1
Direction of rotation	Anti-clockwise viewed on flywheel
Total coolant capacity	5.98 litres
Length	820 mm
Width	476 mm
Height	791 mm
Dry weight (engine)	197 kg (1500/1800 rev/min) 175 kg (3000/3600 rev/min)

Final weight and dimensions will depend on completed specification.

Optional Equipment
- Exhaust silencer
- Workshop manual
- Parts book

Fuel Consumption						
Engine Speed	1500 rev/min		1800 rev/min		3000 rev/min	
	g/kWh	l/hr	g/kWh	l/hr	g/kWh	l/hr
At Standby Power	258	4.1	249	4.8	264	7.5
At Prime Power	254	3.7	247	4.3	264	6.8
At 75% of Prime Power	258	2.8	249	3.3	284	5.5
At 50% of Prime Power	291	2.1	275	2.4	338	4.4

Perkins®

Perkins Engines Company Limited
Peterborough PE1 5NA
United Kingdom
Telephone +44 (0)1733 583000
Fax +44 (0)1733 582240
www.perkins.com

75 years 1932-2007

Distributed by

All information in this document is substantially correct at time of printing and may be altered subsequently
Publication No. 1663/10/05 Produced in England ©2005 Perkins Engines Company Limited